BRUSHED AXIAL FANS

VA68-B101-83A

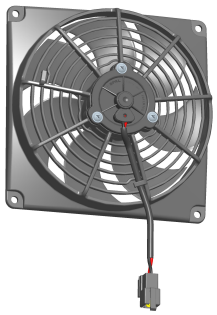

Performance diagram

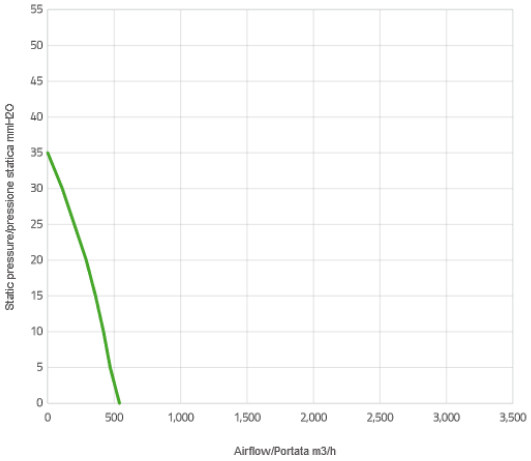

Performance chart

Static pressure	Airflow	Current draw	Airflow	Static pressure
mm H₂O	m³/h	A	CFM	in H₂O
0	540	2,0	319	0
5,0	470	2,2	277	0,2
10,0	420	2,2	248	0,4
15,0	360	2,3	212	0,6
20,0	290	2,4	171	0,8
25,0	200	2,7	118	1,0

This is a not-controlled copy electronically created from the web site www.spalautomotive.com. The information contained herein is subject to change without notice. This catalogue/web site does not imply that any such parts are available for supply. The publisher and any party associated with the production of this catalogue/web site do not accept any responsibility or liability whatsoever (to the extent permitted by law) for any inaccuracy, error, misinformation or misleading statements, whether negligently caused or otherwise, contained in this publication. This publication is protected by copyright and may not be reproduced or copied (using any method of reproduction or copying), sold, transmitted, circulated or otherwise forwarded to third parties, in whole or part, without prior written consent of the author.

Static pressure	Airflow	Current draw	Airflow	Static pressure
30,0	110	2,9	65	1,2
35,0	0	3,0	0	1,4

This is a not-controlled copy electronically created from the web site www.spalautomotive.com. The information contained herein is subject to change without notice. This catalogue/web site does not imply that any such parts are available for supply. The publisher and any party associated with the production of this catalogue/web site do not accept any responsibility or liability whatsoever (to the extent permitted by law) for any inaccuracy, error, misinformation or misleading statements, whether negligently caused or otherwise, contained in this publication. This publication is protected by copyright and may not be reproduced or copied (using any method of reproduction or copying), sold, transmitted, circulated or otherwise forwarded to third parties, in whole or part, without prior written consent of the author.

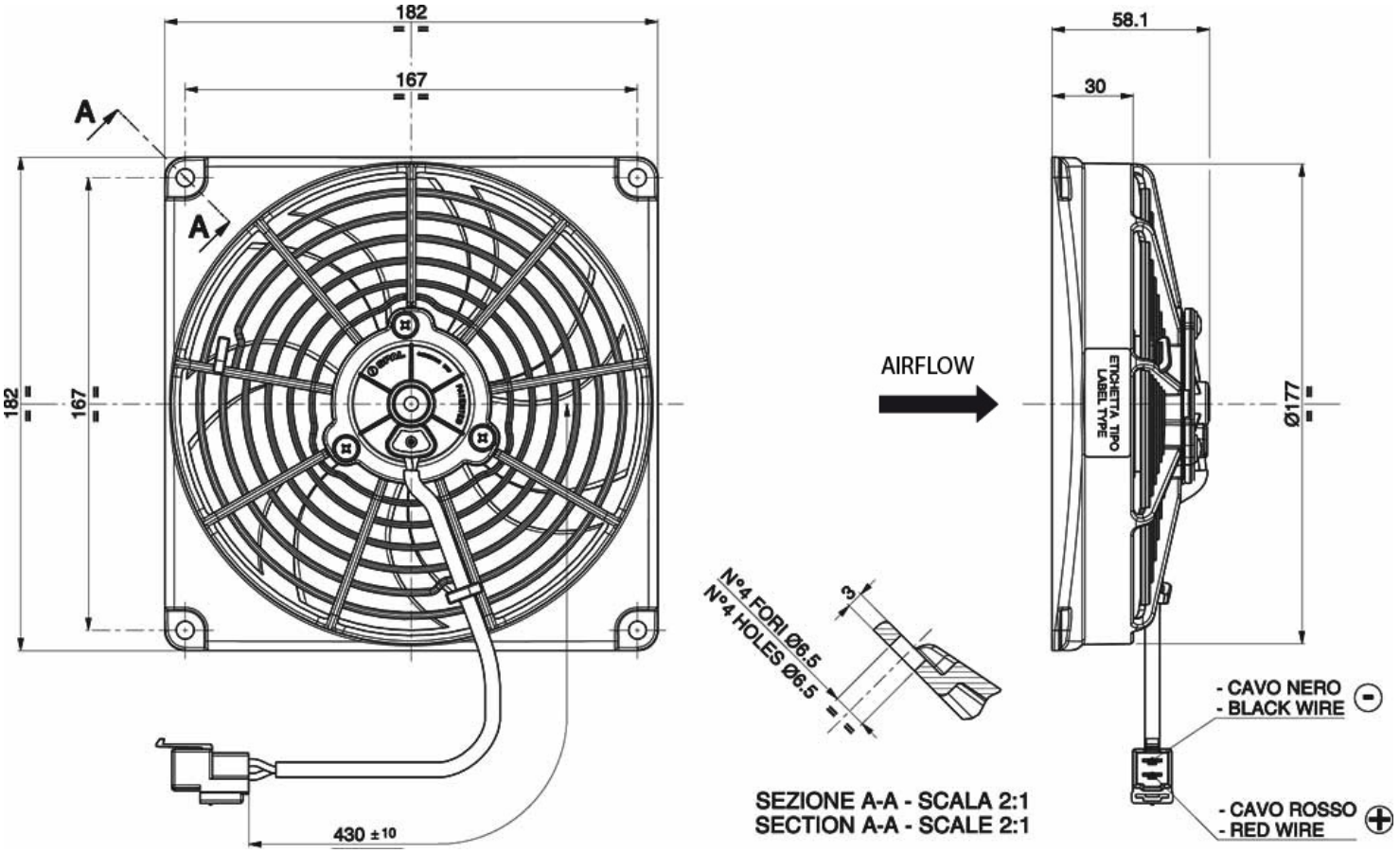

SEZIONE A-A - SCALA 2:1
SECTION A-A - SCALE 2:1

This is a not-controlled copy electronically created from the web site www.spalautomotive.com. The information contained herein is subject to change without notice. This catalogue/web site does not imply that any such parts are available for supply. The publisher and any party associated with the production of this catalogue/web site do not accept any responsibility or liability whatsoever (to the extent permitted by law) for any inaccuracy, error, misinformation or misleading statements, whether negligently caused or otherwise, contained in this publication. This publication is protected by copyright and may not be reproduced or copied (using any method of reproduction or copying), sold, transmitted, circulated or otherwise forwarded to third parties, in whole or part, without prior written consent of the author.